High Resolution Fender Mount Series Cameras

90° High Resolution Side Cameras

This 90° angle fender-mounted camera boasts a wide field of view for enhanced driver visibility, and safer vehicle operation. Designed to withstand incredibly harsh environments, this rugged and durable camera features an IP69K rating for all weather conditions and an operating temperature range of -22°F to +149°F (-30°C to +65°C). The camera is also equipped with a 2.5 mm lens and 9 infrared illuminators for clear vision in total darkness.

Key Features

- Completely Waterproof – IP69K Rating
- 90° Ultra Wide Viewing Angle
- 9 Infra-Red Lights – 50ft of Night Vision

Camera PN	050-5142 (Left) / 050-5143 (Right)
Optical	
Video Interface	Standard Definition Analog (SDA)
Resolution	620 TVL
Lens Size	2.5mm
Field of View (FOV)	90±5(H) ; 50±5°(V)
IR LED's	9
IR Range	50 ft (15.2m)
Electrical	
Power Input (Suppled by DVR / Monitor)	12V DC (+/-10%)
Environmental	
Ingress Protection (IP) Rating	IP69K
Impact Rating	20G Vibration/100G Shock
Operating Temperature	-22°F to +149°F (-30°C to +65°C) / RH 95 Max
Storage Temperature	-31°F to +176°F (-35°C to +80°C) / RH 95 Max

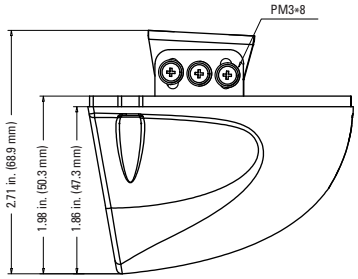

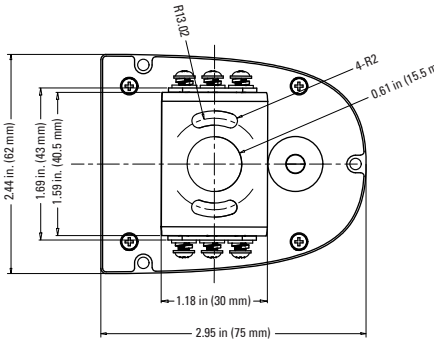

1489-High-Resolution-Fender-Mount-Series-Camera-SS-WR-122325

Copyright ©2025 Safe Fleet and its subsidiaries. All rights reserved. No part of this publication may be reproduced by any means without written permission from Safe Fleet. The information in this publication is believed to be accurate. However, Safe Fleet does not make any representation or warranty to that effect and does not assume responsibility for any consequences resulting from use of such information. Revisions or new editions of the publication may be issued (or not issued) in our discretion to incorporate such changes.

1.877.630.7366
safefleet.net

SAFE FLEET
Driving Safety Forward™