C5W1PD Series

High Definition Exterior IP/Analog Camera

Impact resistant true day/night camera for mobile video surveillance.

The C5W1PD Series IP/Analog Exterior Wedge Cameras are designed to withstand some of the toughest environments. Up to 5 MP of resolution ensures reliable capture of activities outside of the vehicle. A simultaneous SDA (Standard Definition Analog) video output allows the camera to be easily connected to a Driver Assist Monitor, which can be used as an aid when maneuvering the vehicle.

Works with Recorders DH4v2*, DH6*, DH8*, TH8**, NH16K, NH16v1, NH16v2
48V DC PoE Injector Required
*(PN DH-POEKIT48-A)
**(PN TH8POEKIT48)

Key Features

- Up to 5 MP resolution
- True day/night functionality and infrared illuminators for capturing images in various lighting scenarios
- Low-profile, rugged design
- Tilt/pan/rotate gimbal adjustment
- Simplify the installation with PoE
- IP68, IP69 and IK10 ratings
- Advanced video compression technologies with tri-streaming capability accommodates multiple settings
- Dedicated SDA (Standard Definition Analog) video output for live viewing on a driver-assist or public display monitor
- Heaters to help maintain the operating temperature range and optical performance

1.877.630.7366
safefleet.net

SAFE FLEET
Driving Safety Forward™

C5W1PD Series

High Definition Exterior IP/Analog Camera

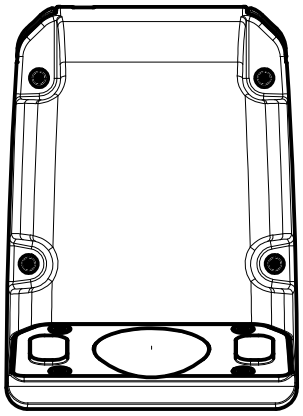

TOP

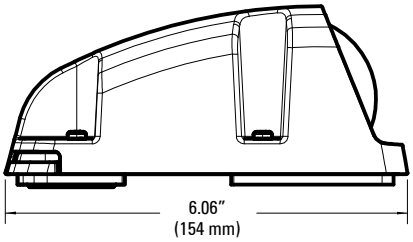

LEFT

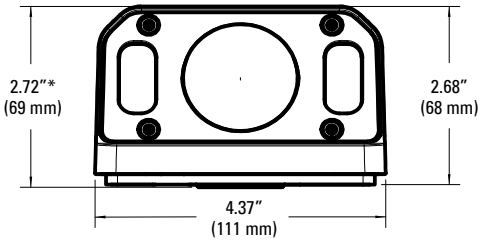

FRONT

* Note: Height reflects uninstalled dimension. Base material will compress upon installation.

Camera	
Sensor	5Mpx 1/2.8" All-pixel Scan CMOS
IP Compression/ Standard	H.265/H.264/MJPEG
Maximum Resolution	5MP (2592x1944)
Resolution	IP: 2560x1920, 2048x1536, 1920x1080, 1280x960, 1280x720, 640x480, 640x360, 320x240 Analog: 500 TVL
Frame Rate	1 FPS ~ 30 FPS
S/N Ratio	>45dB (Low ISO)
Electronic Shutter	1/30 to ≤ 1/30,000
Heaters	Board and Lens Ring
Regulatory	FMVSS302, FCC, CE, RoHS, Prop 65, NDAA
Lighting Performance	
Wide Dynamic Range	HDR >= 100dB
Digital Noise Reduction	3D
Day/Night	Electro-mechanical IR cut filter with auto switch
White Balance	Yes, Auto (ATW 2000K ~ 10000K)
Active Gain Control	Yes, Auto
Color Sensitivity	2.9mm lens: 0.08 lux at 50 IRE (F2.0, AGC ON) 3.9mm lens: 0.08 lux at 50 IRE (F1.6, AGC ON)
B/W Sensitivity	0 Lux (IR on)
IR Range	Up to 15m, Smart IR
Housing	
Camera Type	Exterior Wedge Camera
Ratings	IP68, IP69K & IK10
Outdoor	Yes
Vandal Resistant	Yes
Lens	
Type	Fixed Focal Length
Focal Length	2.9mm; 3.9mm

Power	
Power Consumption	9W total (max), 2.5W reserved for lens ring and board heaters
PoE Standard	PoE (802.3af Class 0)
External Power Supply	12V DC
Network	
Bitrate Control	CBR (H.264: 512~32768kbps, H.265: 512~32768kbps) CVBR, VBR, MJPEG
Network Protocols	IPv4: HTTP/HTTPS; SSL/TLS; DNS client; NTP client; TCP; UDP; IGMP; ICMP; DHCP; ARP; RTSP/RTP/RTCP; Multicast; encrypted RTSP/RTP/ RTCP (RTSPS/SRTP); IEEE802.1X(EAP-TLS, EAP-TTLS, PEAP); WS, Discovery; mDNS; FTP Client; SNMP v2c/v3/Trap
ONVIF Compliance	Profile S and T
Mechanical/Environmental	
Weight	2.05 lbs (930g)
Operating Temperature	-40°C to +65°C (-40°F to 149°F)
Storage Temperature	-40°C to +70°C (-40°F to +158°F)
Adjustability	3-axis gimbal
Ordering Information (Standard Models)	
C5W1PD104E-R	IP/Analog Camera, Exterior, Wedge, 2.9mm Lens with Ring Heater, Polycarbonate Bubble, RJ45 PoE or 12V DC, 5MP, Day/Night with IR
C5W1PD078E-R	IP/Analog Camera, Exterior, Wedge, 3.9mm Lens with Ring Heater, Polycarbonate Bubble, RJ45 PoE or 12V DC, 5MP, Day/Night with IR
C3WNBG-C5WNBG-ADPTPLT-1	Adapter Plate Kit for C3W9PD Series Camera (or MVC900X Series Camera) with No Brush Guard to C5W1PD Series Camera with No Brush Guard

Available Lenses

Code	Size (mm)	F-stop	Viewing Angle (v)	Viewing Angle (h)
104	2.9	F2.0	74° (4:3), 56.8° (16:9)	104° (4:3 & 16:9)
078	3.9	F2.0	56° (4:3), 42.7° (16:9)	78° (4:3 & 16:9)

1480-C5W1PD-R-SS-SF-101525

Copyright ©2025 Safe Fleet and its subsidiaries. All rights reserved. No part of this publication may be reproduced by any means without written permission from Safe Fleet. The information in this publication is believed to be accurate. However, Safe Fleet does not make any representation or warranty to that effect and does not assume responsibility for any consequences resulting from use of such information. Revisions or new editions of the publication may be issued (or not issued) in our discretion to incorporate such changes.

1.877.630.7366
safefleet.net

SAFE FLEET
Driving Safety Forward™